MRD 3

5.1.0 /I

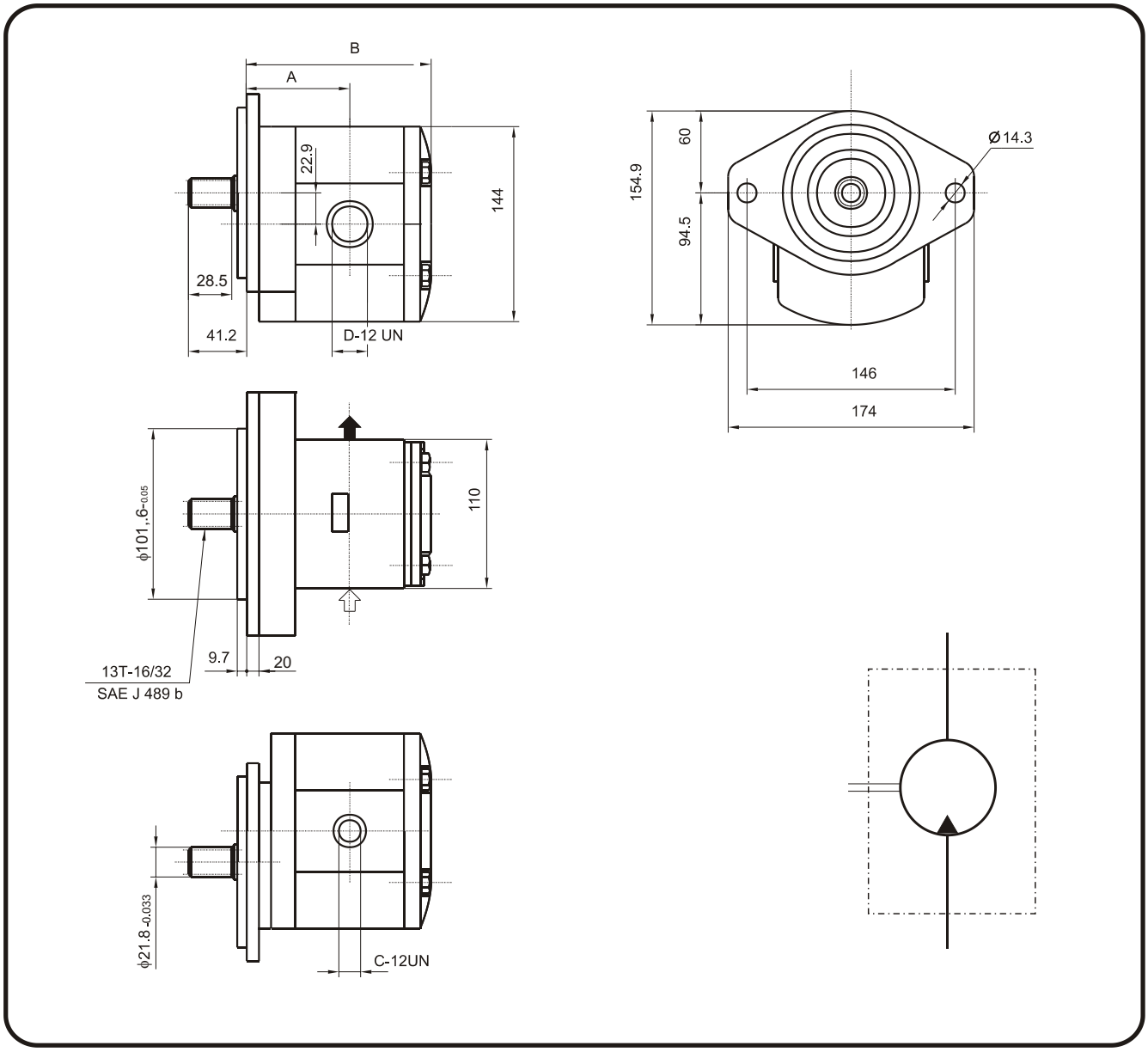

Type code		Displa-cement cm³/rev	Dimensions				Weight Kg
↻	↺		A	B	C	D	
MRD3-511D/I	MRD3-511S/I	22.5	62	129.7	1 5/8"	1 5/16"	11
MRD3-512D/I	MRD3-512S/I	28	64	134.7	1 5/8"	1 5/16"	11.2
MRD3-513D/I	MRD3-513S/I	32	65.5	138.2	1 5/8"	1 5/16"	11.4
MRD3-514D/I	MRD3-514S/I	38	67.5	143.7	1 5/8"	1 5/16"	11.7
MRD3-515D/I	MRD3-515S/I	45	70.5	150.2	1 5/8"	1 5/16"	11.9
MRD3-516D/I	MRD3-516S/I	56	78.2	161.2	1 7/8"	1 5/16"	12.4
MRD3-517D/I	MRD3-517S/I	63	81.5	167.8	1 7/8"	1 5/16"	12.6
MRD3-518D/I	MRD3-518S/I	70	88	174.4	1 7/8"	1 5/16"	12.9