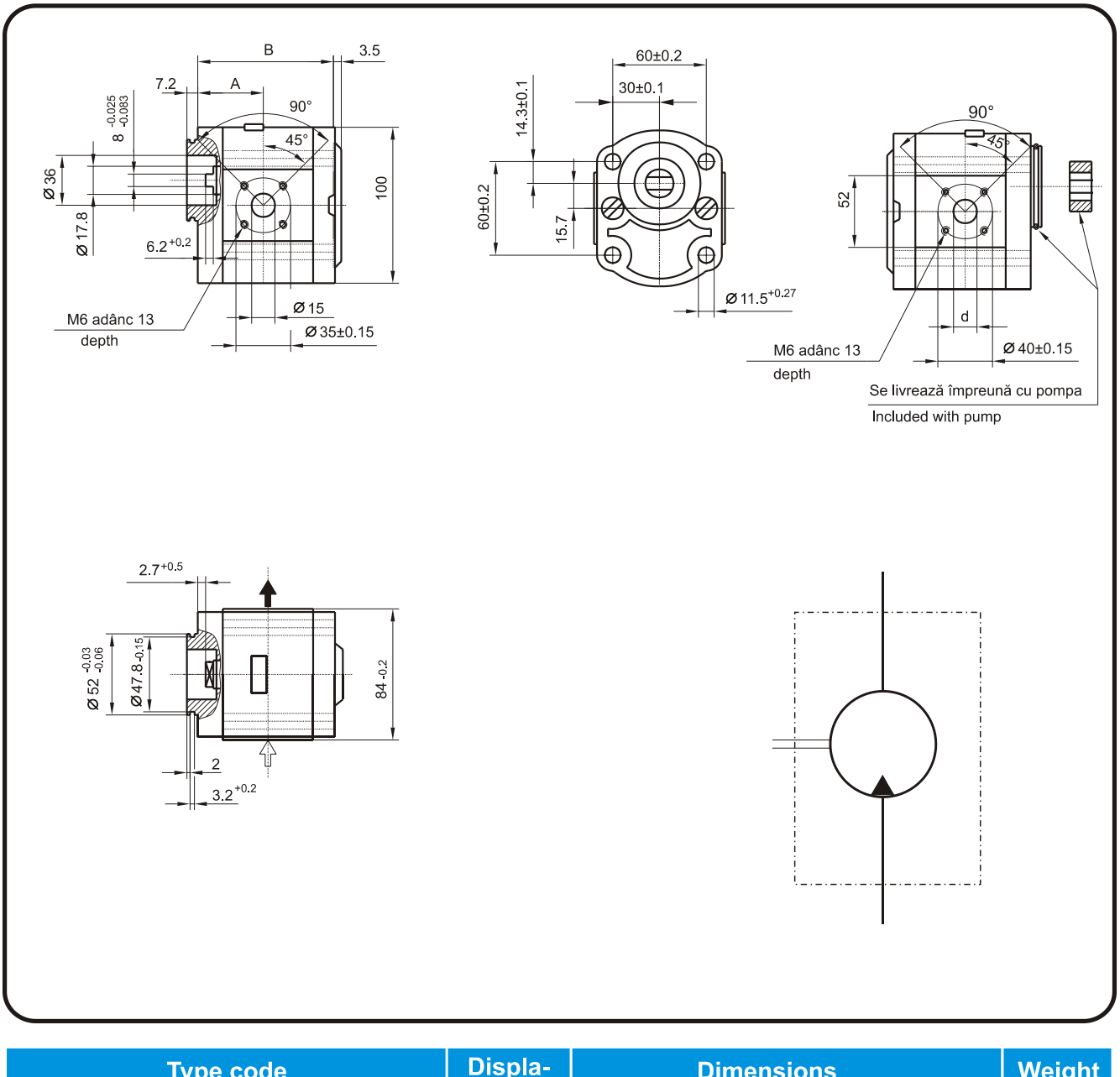

Type code		Displa-cement cm^3/rev	Dimensions				Weight Kg
↻	↺		A	B	d		
MRD2-613D	MRD2-613S	8	40.75	80.5	20		2.9
MRD2-614D	MRD2-614S	11	44.5	85.5	20		3.0
MRD2-615D	MRD2-615S	14	45	90.5	20		3.2
MRD2-616D	MRD2-616S	16	45	94	20		3.4
MRD2-617D	MRD2-617S	19	45	99	20		3.6
MRD2-618D	MRD2-618S	22.5	52.6	104.3	20		3.8