PRD 2

6.1.0

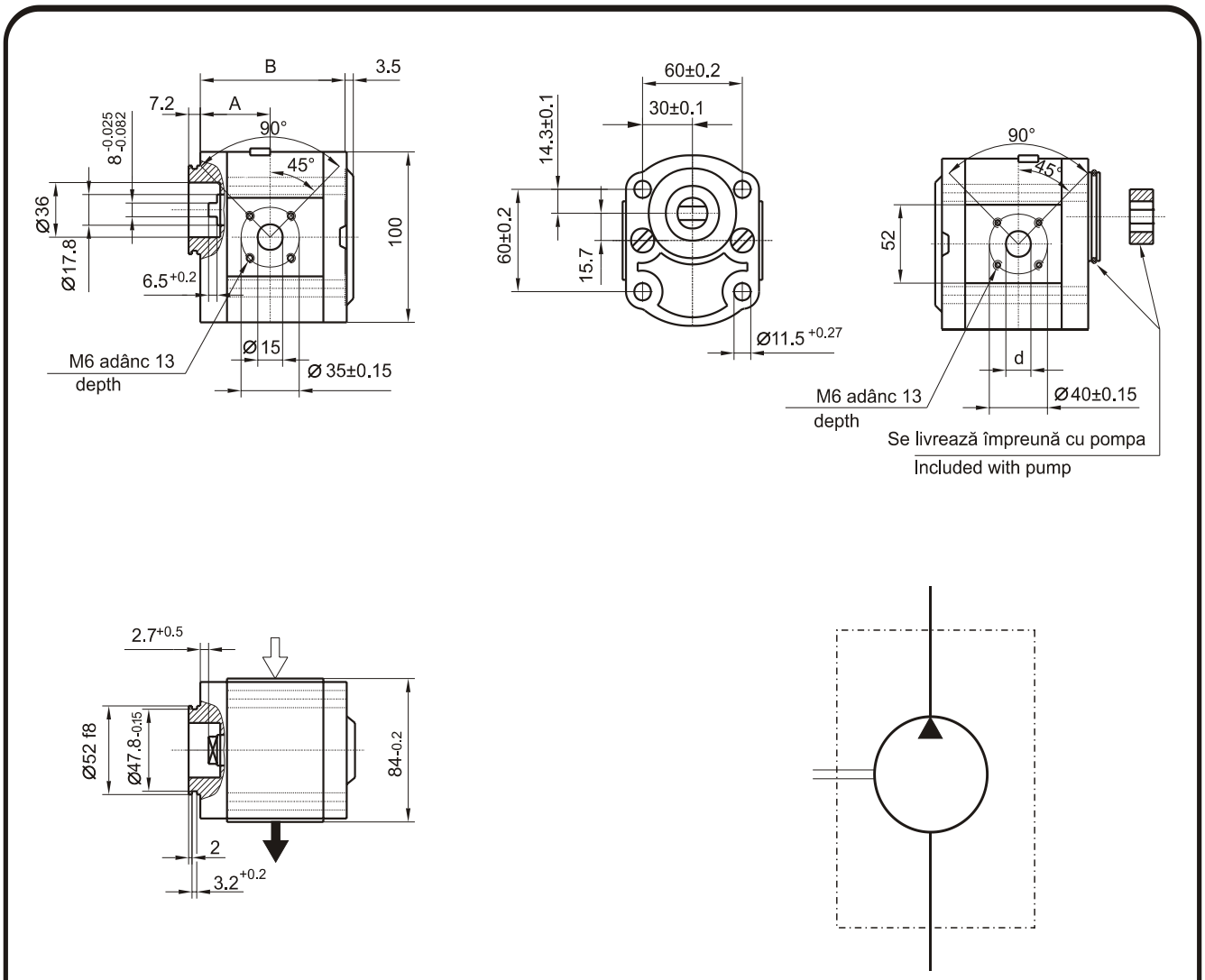

Type code		Displa-cement cm³/rev	Dimensions				Weight Kg
↻	↺		A	B	d		
PRD2-611D	PRD1-611S	4	37.3	73.7	15		2.8
PRD2-612D	PRD2-612S	5.5	38.6	76.2	15		2.85
PRD2-613D	PRD2-613S	8	40.6	80.3	20		2.9
PRD2-614D	PRD2-614S	11	45	85.3	20		3.0
PRD2-616D	PRD2-616S	16	45	93.7	20		3.4
PRD2-617D	PRD2-617S	19	45	98.7	20		3.6
PRD2-618D	PRD2-618S	22.5	52.5	104.1	20		3.8