PRD 3

2.1.0

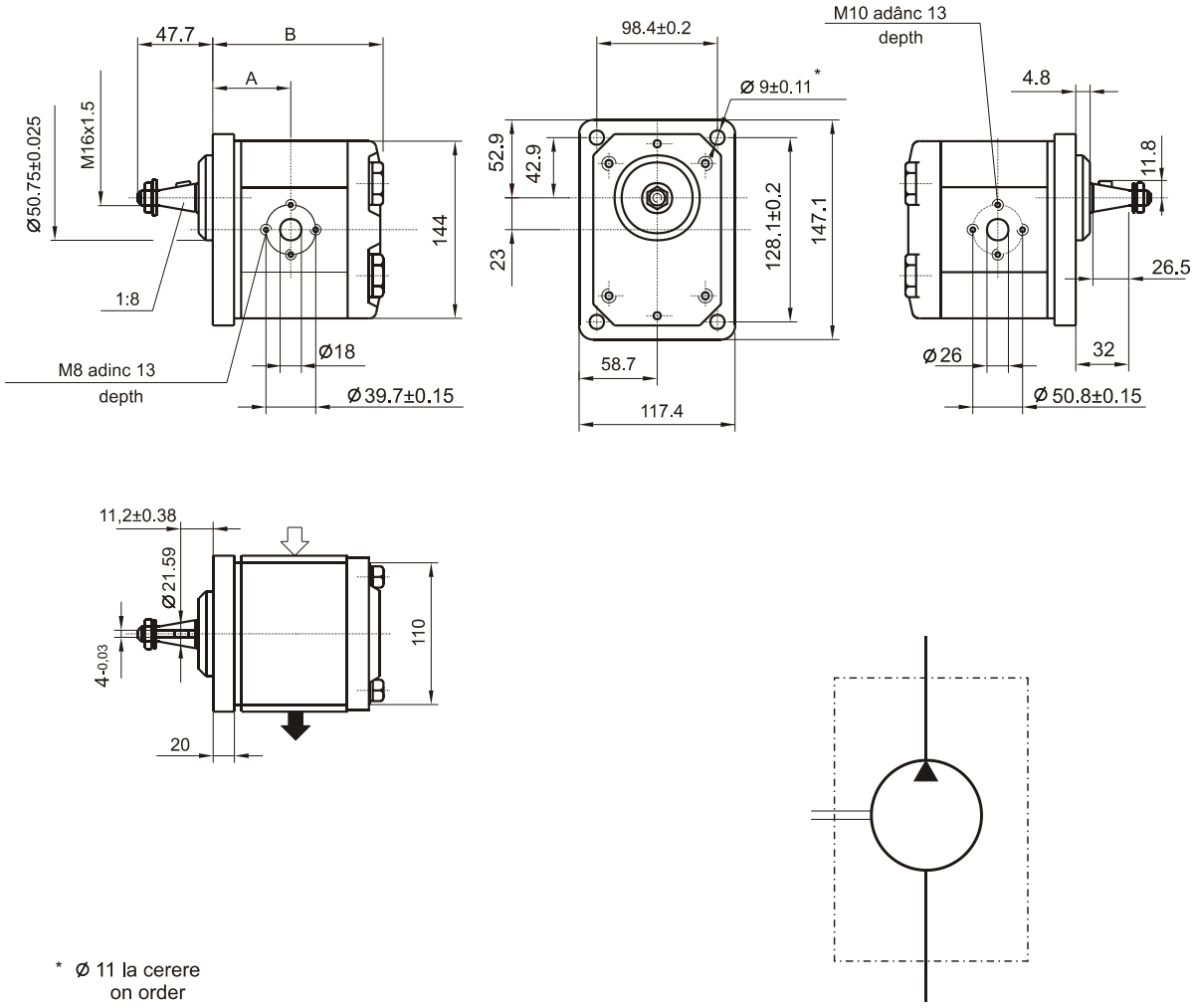

Type code		Displa-cement cm^3/rev	Dimensions				Weight Kg
↻	↺		A	B			
PRD3-211D	PRD3-211S	22.5	61	128.7			9.0
PRD3-212D	PRD3-212S	28	63	133.7			9.1
PRD3-213D	PRD3-213S	32	64.5	137.2			9.2
PRD3-214D	PRD3-214S	38	66.5	142.7			9.5
PRD3-215D	PRD3-215S	45	69.5	149.2			9.7
PRD3-216D	PRD3-216S	56	77	160.2			10.2
PRD3-217D	PRD3-217S	63	80.6	166.8			
PRD3-218D	PRD3-218S	70	87.2	173.4			