PRD 3

2.1.0 G

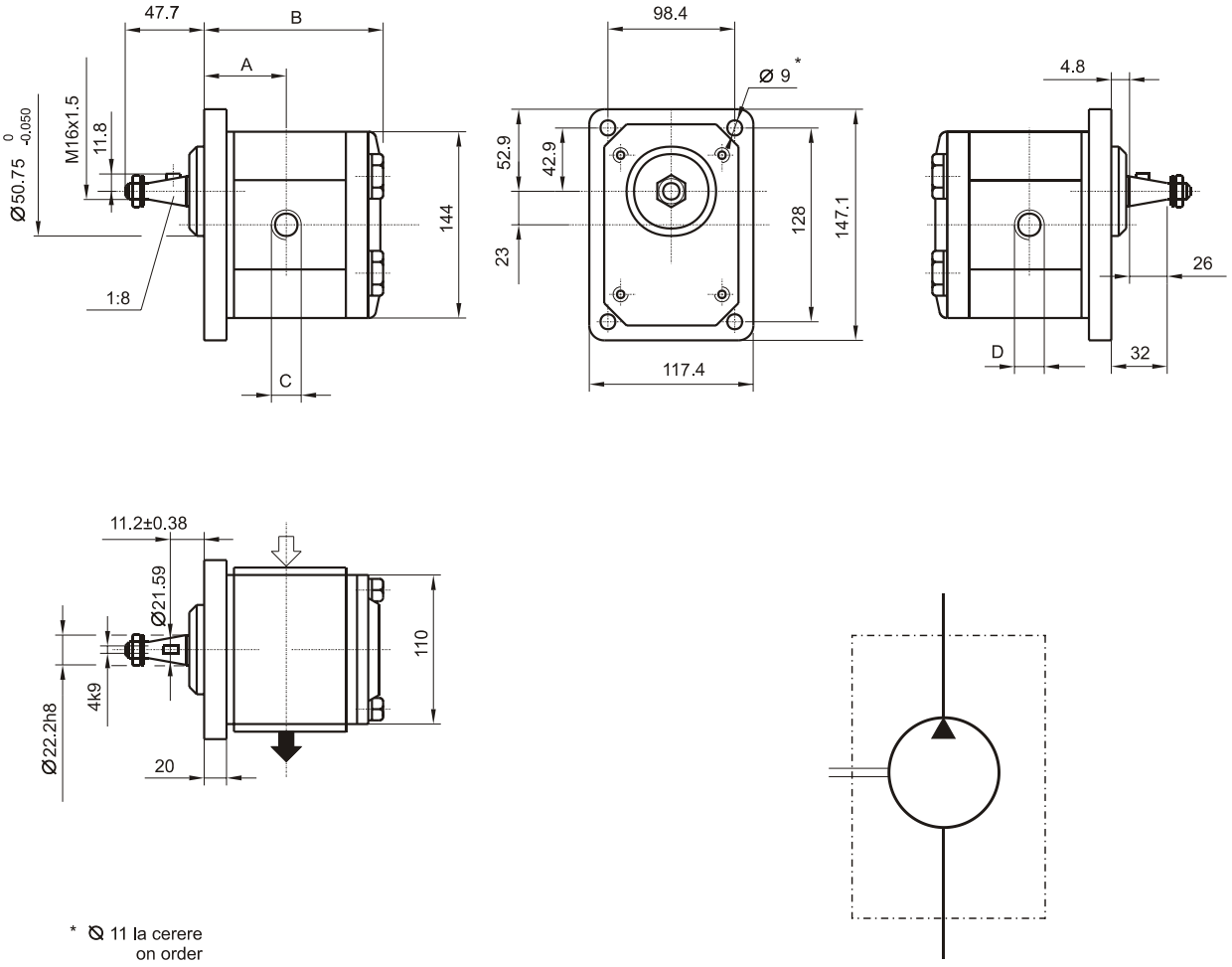

Type code		Displa-cement cm³/rev	Dimensions				Weight Kg
↻	↺		A	B	C	D	
PRD3-211D3/4"-1"	PRD3-211S3/4"-1"	22.5	61	128.7	G3/4"	G1"	9.0
PRD3-212D3/4"-1"	PRD3-212S3/4"-1"	28	63	133.7	G3/4"	G1"	9.1
PRD3-213D3/4"-1"	PRD3-213S3/4"-1"	32	64.5	137.2	G3/4"	G1"	9.2
PRD3-214D3/4"-1"	PRD3-214S3/4"-1"	38	66.5	142.7	G3/4"	G1"	9.5
PRD3-215D3/4"-1'	PRD3-215S3/4"-1'	45	69.5	149.2	G3/4"	G1"	9.7
PRD3-216D3/4"-1'	PRD3-216S3/4"-1'	56	77	160.2	G3/4"	G1"	10.2