PRD 3

3.1.0

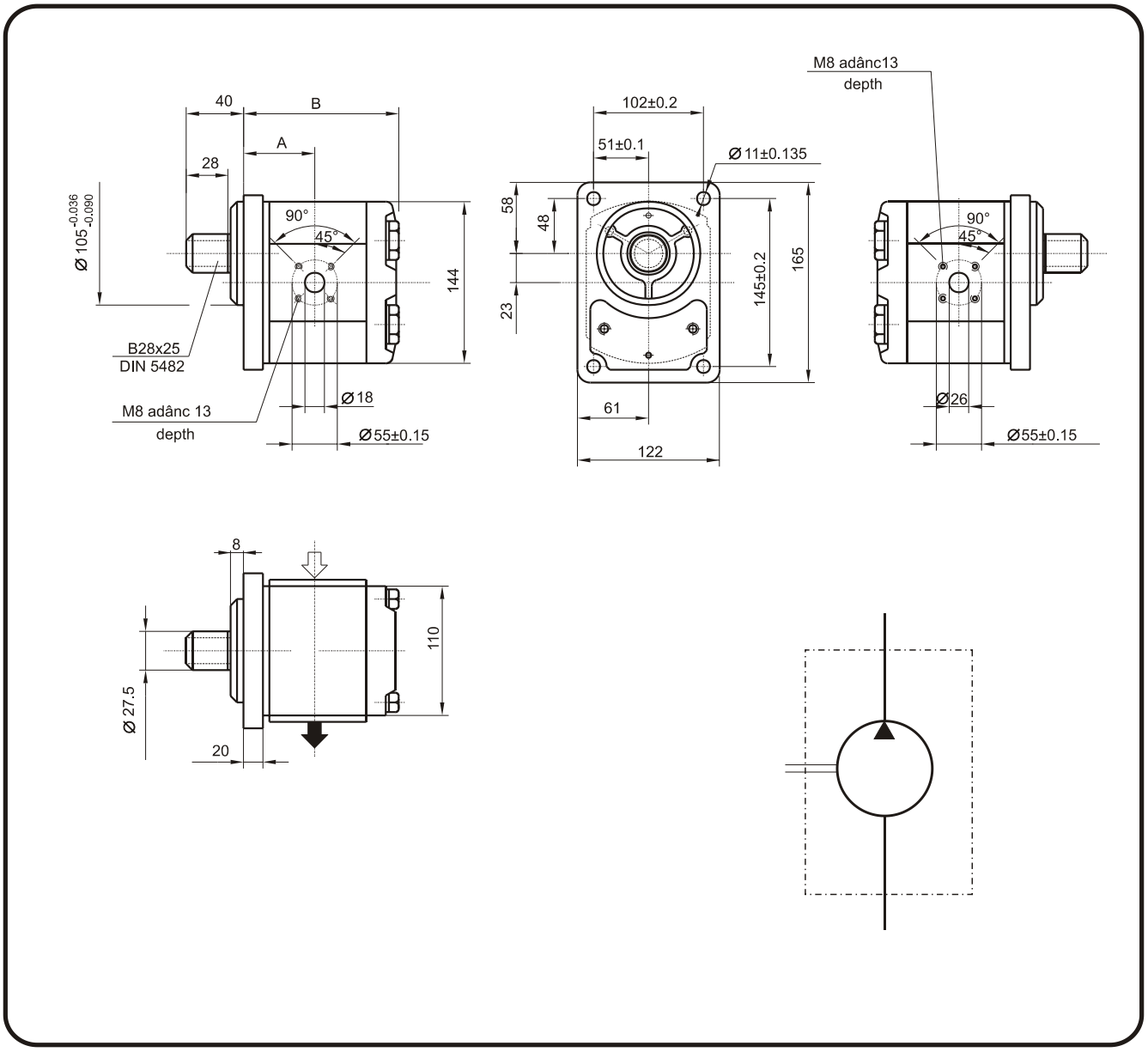

Type code		Displa-cement cm^3/rev	Dimensions				Weight Kg
↻	↺		A	B			
PRD3-311D	PRD3-311S	22.5	61	128.7			9.0
PRD3-312D	PRD3-312S	28	63	133.7			9.1
PRD3-313D	PRD3-313S	32	64.5	137.2			9.2
PRD3-314D	PRD3-314S	38	66.5	142.7			9.5
PRD3-315D	PRD3-315S	45	69.5	149.2			9.7
PRD3-316D	PRD3-316S	56	77	160.2			10.2
PRD3-317D	PRD3-317S	63	80.6	166.8			
PRD3-318D	PRD3-318S	70	87.2	173.4			