4.1.0

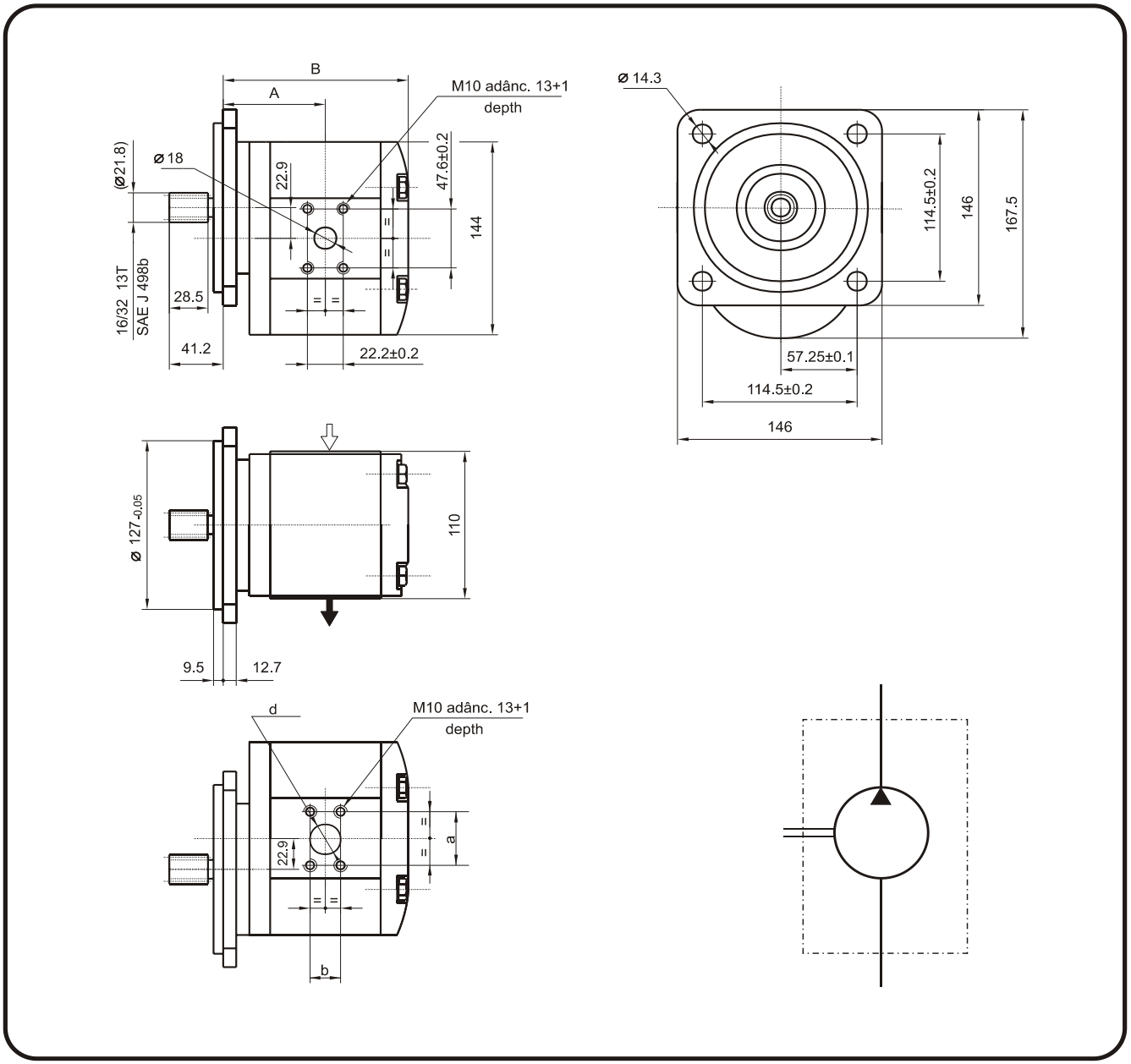

Type code		Displa-cement cm^3/rev	Dimensions					Weight Kg
			A	B	d	a	b	
PRD3-411D	PRD3-411S	22.5	92.5	160.2	ϕ26	52.4±0.2	26.2±0.2	11.0
PRD3-412D	PRD3-412S	28	94.5	165.2	ϕ26	52.4±0.2	26.2±0.2	11.2
PRD3-413D	PRD3-413S	32	96	168.7	ϕ26	52.4±0.2	26.2±0.2	11.4
PRD3-414D	PRD3-414S	38	98	174.2	ϕ26	52.4±0.2	26.2±0.2	11.7
PRD3-415D	PRD3-415S	45	101	180.7	ϕ26	52.4±0.2	26.2±0.2	11.9
PRD3-416D	PRD3-416S	56	108.7	191.7	ϕ26	52.4±0.2	26.2±0.2	12.4
PRD3-417D	PRD3-417S	63	112.1	198.3	ϕ32	58.7±0.2	30.2±0.2	12.6
PRD3-418D	PRD3-418S	70	118.7	205	ϕ32	58.7±0.2	30.2±0.2	12.9