# PRD 3

## 5.1.0 /I*

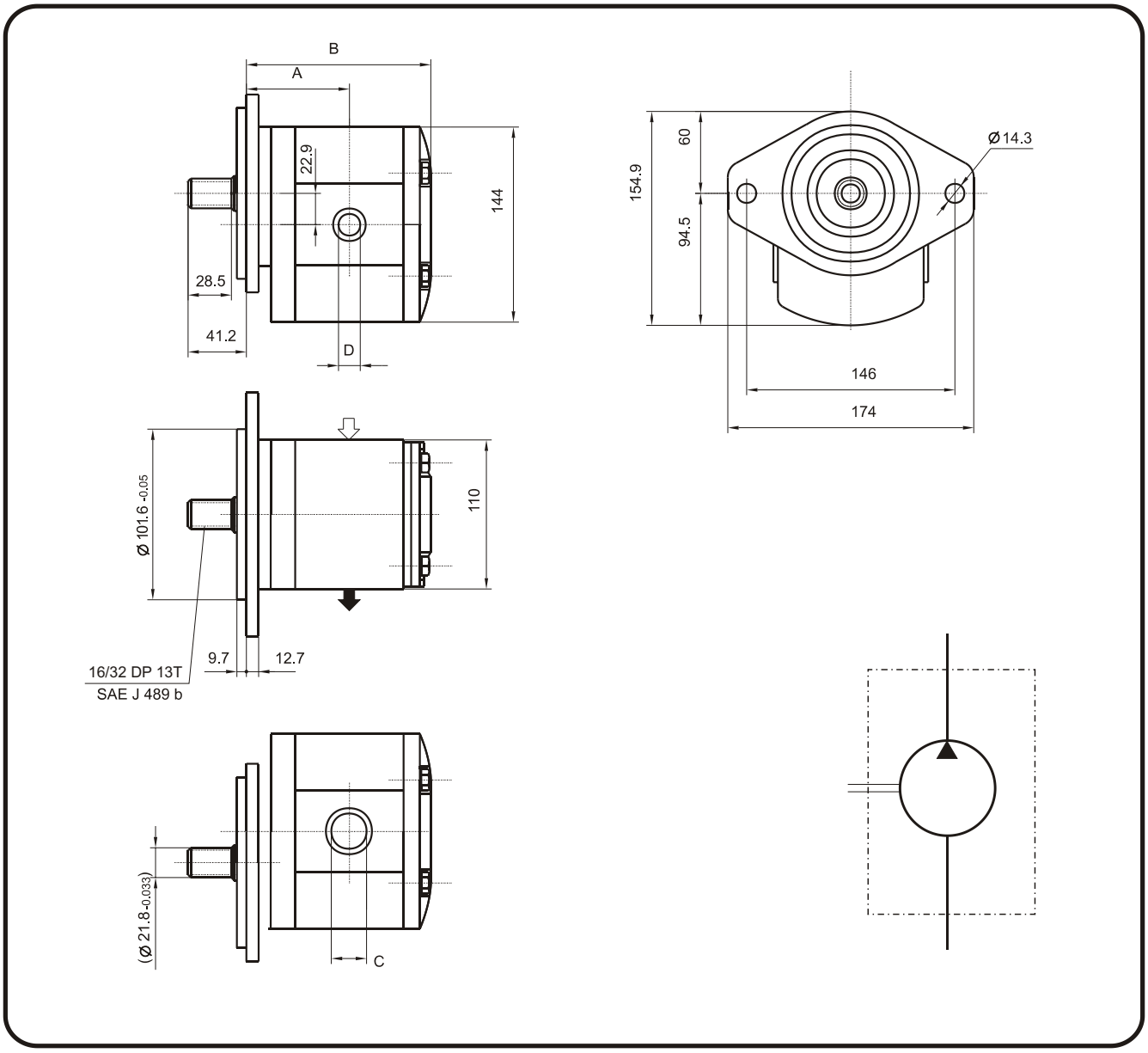


| Type code | | Displa-cement $cm^3$/rev | Dimensions | | | | Weight Kg |
|---|---|---|---|---|---|---|---|
| | | | A | B | C | D | |
| PRD3-511D/I | PRD3-511S/I | 22.5 | 62 | 129.7 | 1.5/8" | 1.5/16" | 11 |
| PRD3-512D/I | PRD3-512S/I | 28 | 64 | 134.7 | 1.5/8" | 1.5/16" | 11.2 |
| PRD3-513D/I | PRD3-513S/I | 32 | 65.5 | 138.2 | 1.5/8" | 1.5/16" | 11.4 |
| PRD3-514D/I | PRD3-514S/I | 38 | 67.5 | 143.7 | 1.5/8" | 1.5/16" | 11.7 |
| PRD3-515D/I | PRD3-515S/I | 45 | 70.5 | 150.2 | 1.5/8" | 1.5/16" | 11.9 |
| PRD3-516D/I | PRD3-516S/I | 56 | 78.2 | 161.2 | 1.7/8" | 1.5/16" | 12.4 |
| PRD3-517D/I | PRD3-517S/I | 63 | 81.5 | 167.8 | 1.7/8" | 1.5/16" | 12.6 |
| PRD3-518D/I | PRD3-518S/I | 70 | 88 | 174.4 | 1.7/8" | 1.5/16" | 12.9 |
| | | | | | | | |
| | | | | | | | |