5.1.0

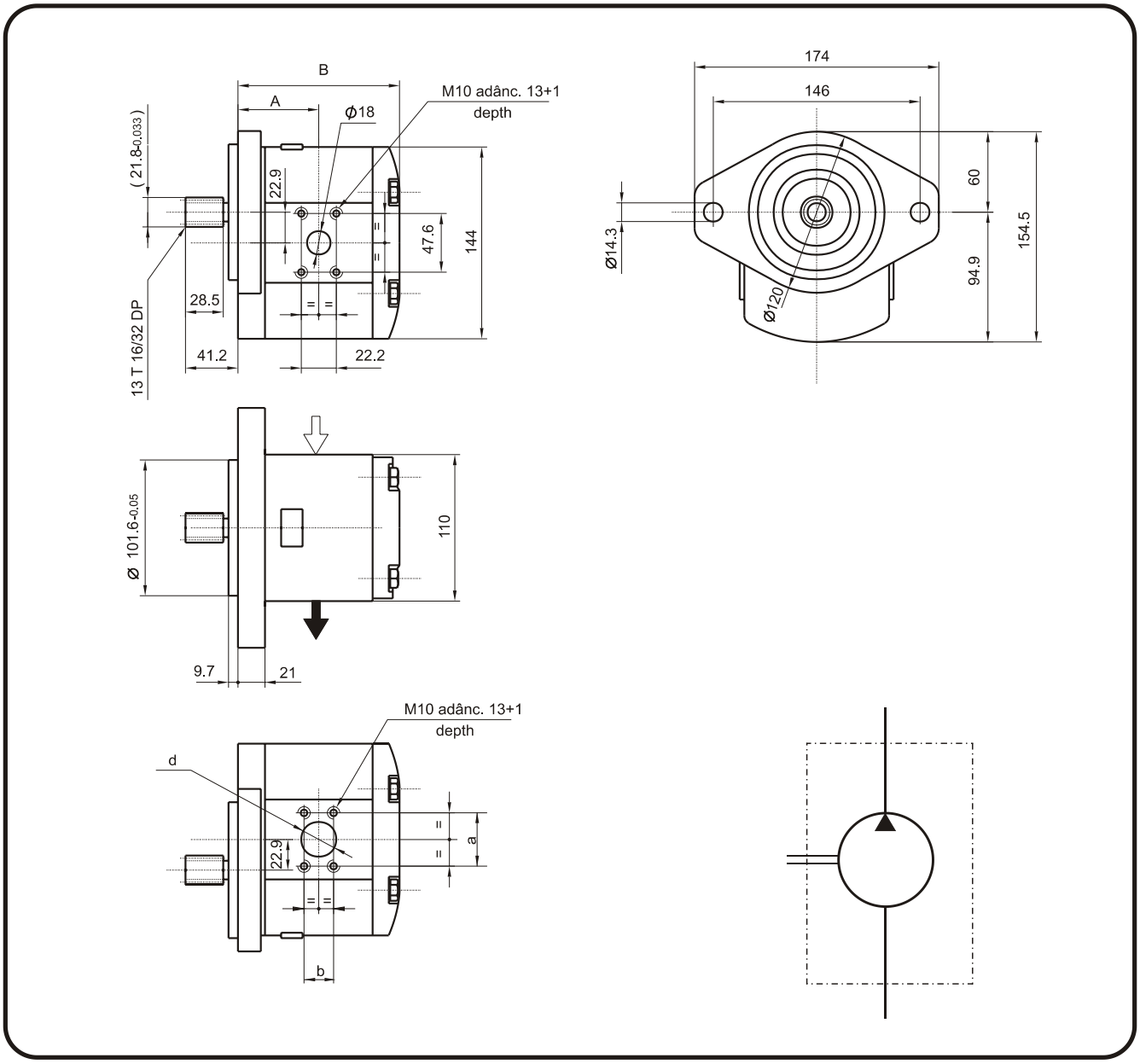

Type code		Displa-cement cm^3/rev	Dimensions					Weight Kg
↻	↺		A	B	d	a	b	
PRD3-511D	PRD3-511S	22.5	62	129.7	ϕ26	52.4±0.2	26.2±0.2	11
PRD3-512D	PRD3-512S	28	64	134.7	ϕ26	52.4±0.2	26.2±0.2	11.2
PRD3-513D	PRD3-513S	32	65.5	138.2	ϕ26	52.4±0.2	26.2±0.2	11.4
PRD3-514D	PRD3-514S	38	67.5	143.7	ϕ26	52.4±0.2	26.2±0.2	11.7
PRD3-515D	PRD3-515S	45	70.5	150.2	ϕ26	52.4±0.2	26.2±0.2	11.9
PRD3-516D	PRD3-516S	56	78.2	161.2	ϕ26	52.4±0.2	26.2±0.2	12.4
PRD3-517D	PRD3-517S	63	81.5	167.8	ϕ32	58.7±0.2	30.2±0.2	12.6
PRD3-518D	PRD3-518S	70	88	174.4	ϕ32	58.7±0.2	30.2±0.2	12.9