PRD 3

5.8.0 xy

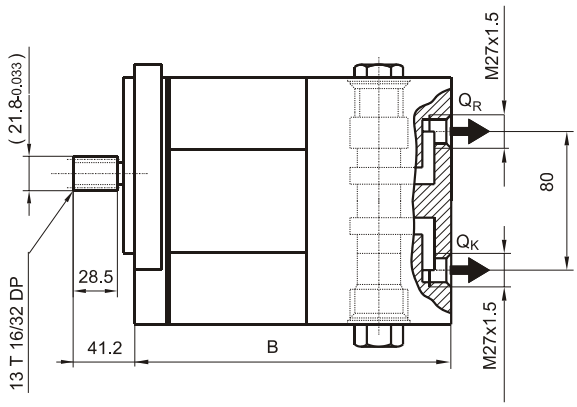

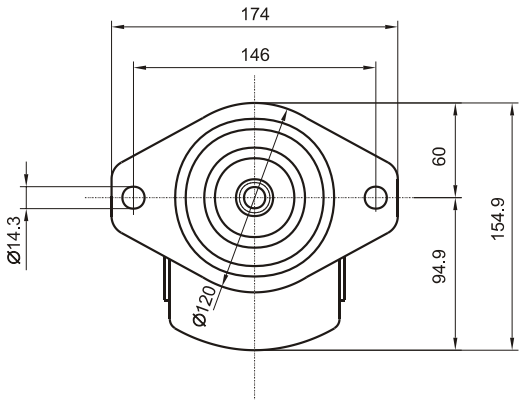

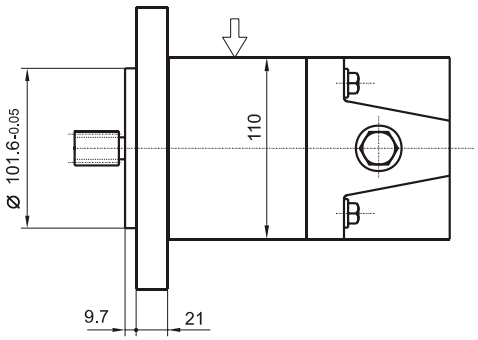

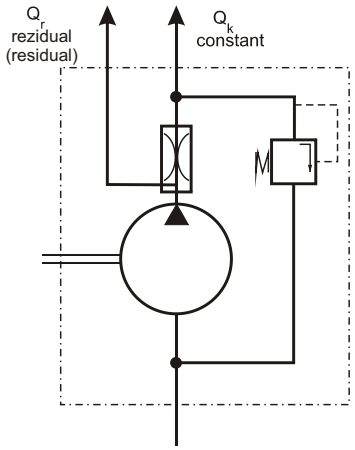

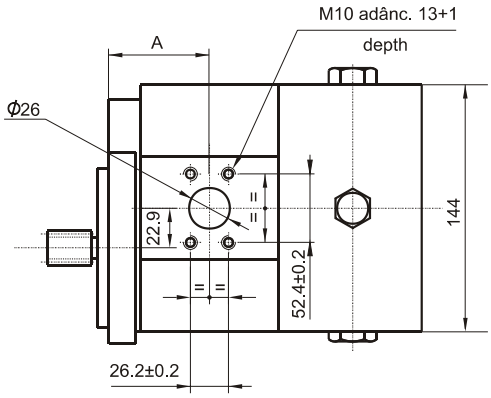

Presiunea de descărcare a supapei
Discharge pressure of the relief valve

x	1	2	3	4	5			
P_d [bar]	63	80	100	125	160			

y	1	2	3	4	
Q_k (l/min)	30	35	40	50	

Type code		Displa-cement cm^3/rev	Dimensions			Weight Kg
↻	↺		A	B		
PRD3-581Dxy	PRD3-581Sxy	22.5	62	175		11.8
PRD3-582Dxy	PRD3-582Sxy	28	64	180		11.9
PRD3-583Dxy	PRD3-583Sxy	32	65.5	183		12
PRD3-584Dxy	PRD3-584Sxy	38	67.5	189		12.3
PRD3-585Dxy	PRD3-585Sxy	45	70.5	195		12.5
PRD3-586Dxy	PRD3-586Sxy	56	78.2	206		13