PRD 22

1.2.00 x

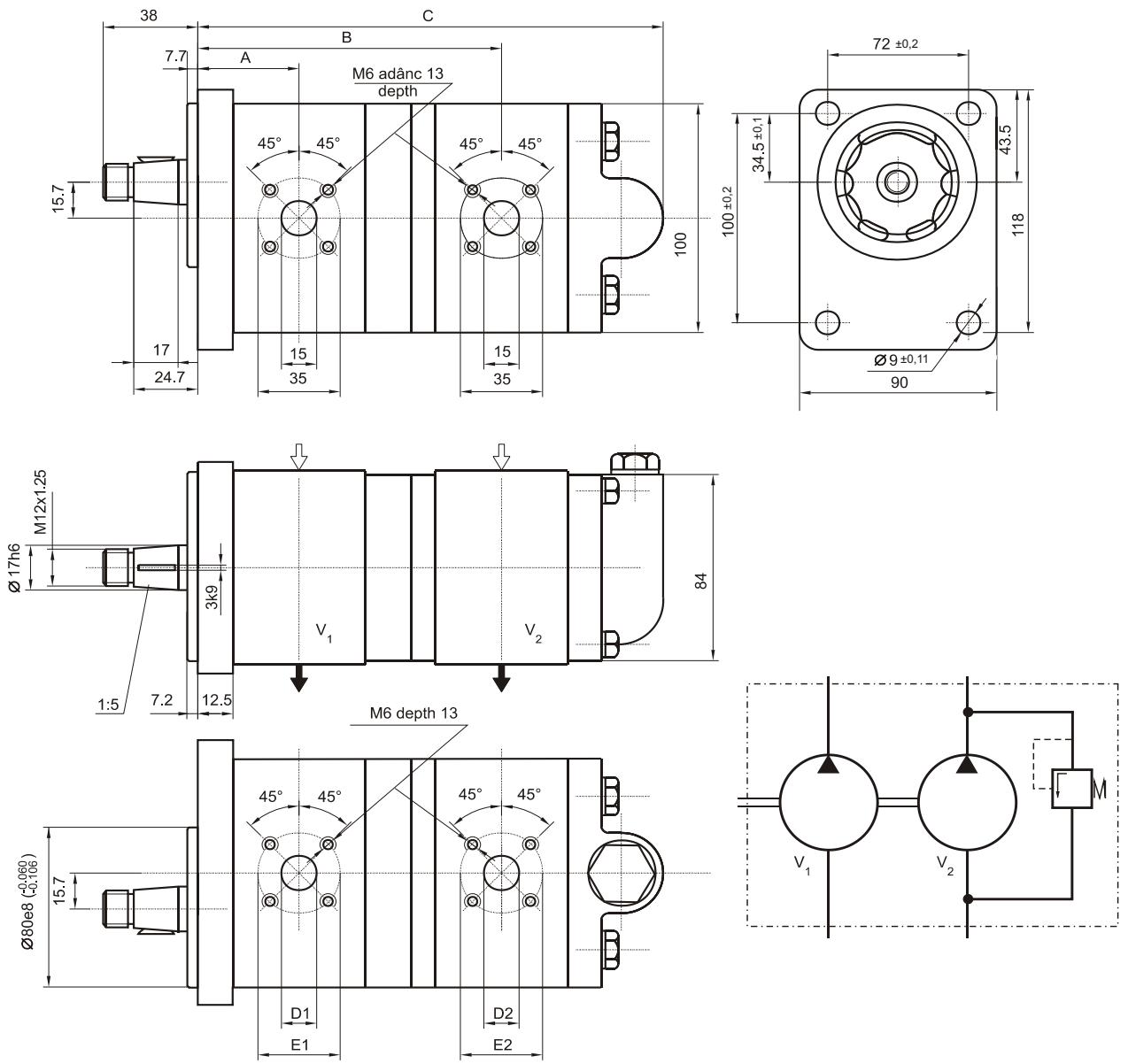

Presiunea de descărcare a supapei
Discharge pressure of the relief valve

x	1	2	3	4	5	6	7	8
P_d [bar]	63	80	100	125	160	180	200	220

Type code		Displa-cement V_1+V_2 cm^3/rev	Dimensions								Weight Kg
			A	B	C	D1	E1	D2	E2		
PRD22-1252Dx	PRD22-1252Sx	14+5.5	48.8	140.44	206	20	40	15	35		
PRD22-1262Dx	PRD22-1262Sx	16+5.5	47.5	142.7	211	20	40	15	35		7.4