PRD 22

3.2.00 x

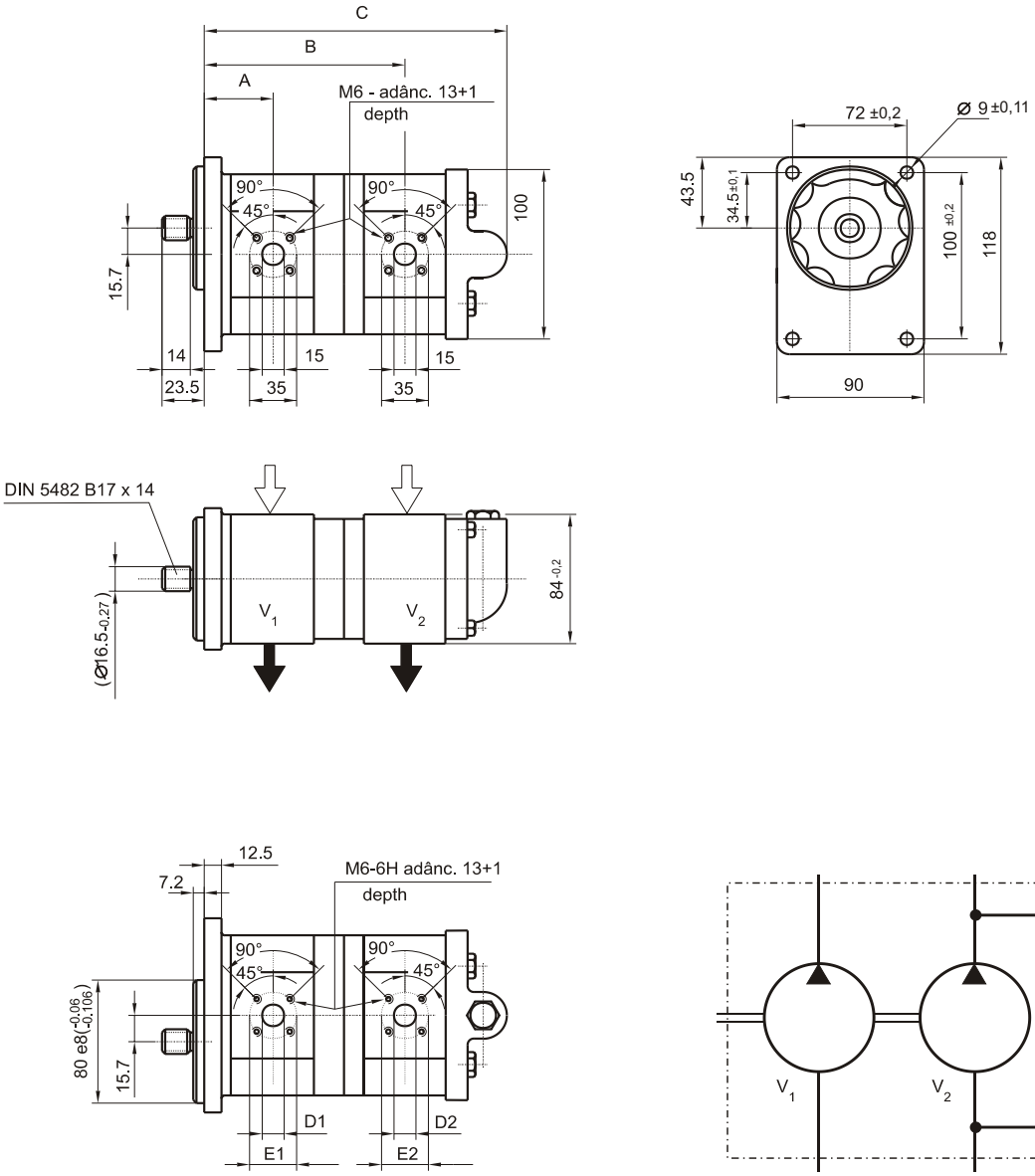

Presiunea de descărcare a supapei
Discharge pressure of the relief valve

x	1	2	3	4	5	6	7	8
P_d [bar]	63	80	100	125	160	180	200	220

Type code		Displa-cement V_1+V_2 cm^3/rev	Dimensions								Weight Kg
			A	B	C	D1	E1	D2	E2		
PRD22-3251Dx	PRD22-3251Sx	14+4	48	138.8	204	20	39.7	15	30.2		7.1