PRD 32

12.1.00 /I

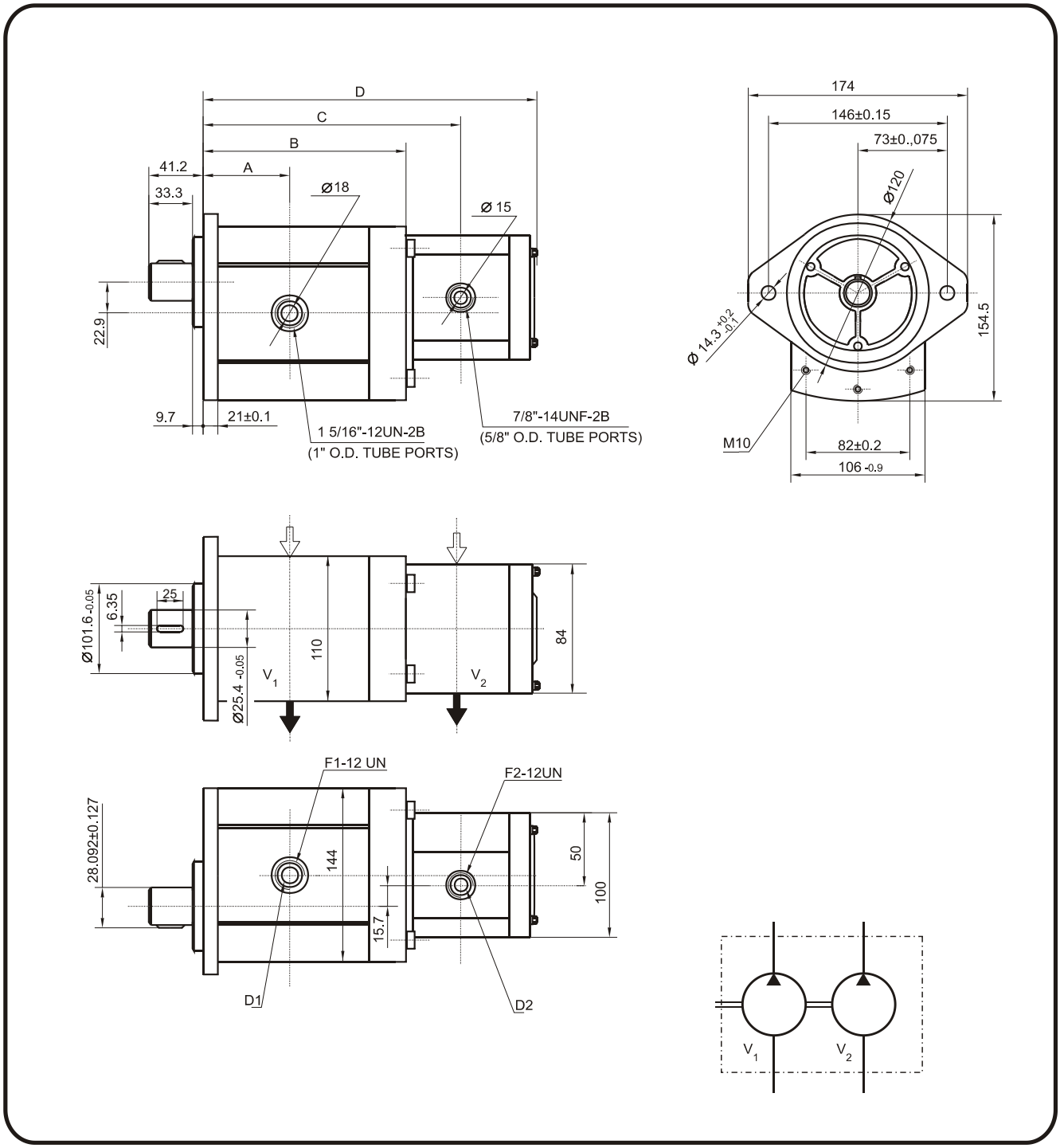

Type code		Displa-cement V_1+V_2 cm^3/rev	Dimensions											Weight Kg
			A	B	C	D	D1	D2	F1	F2				
PRD32-12127D/I	PRD32-12127S/I	28+19	64	185	221	281	26	20	1 5/8"	1 1/16"				
PRD32-12135D/I	PRD32-12135S/I	32+14	65	140	188	243	26	20	1 5/8"	1 1/16"				14.7