PRD 222

12.1.000*

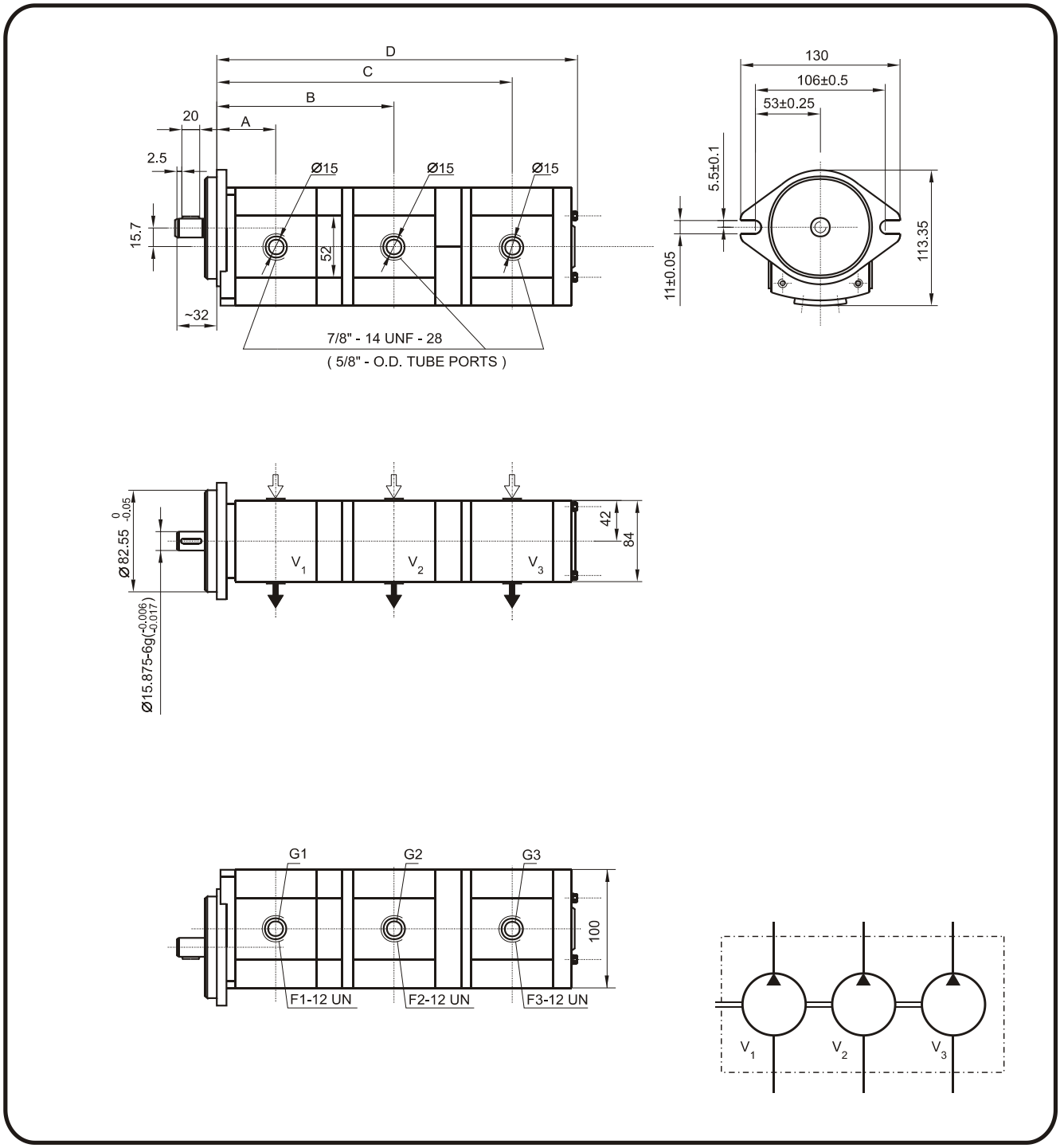

Type code		Displa-cement $V_1+V_2+V_3$ cm^3/rev	Dimensions											Weight Kg
↻	↺		A	B	C	D		F1	F2	F3	G1	G2	G3	
PRD222-121221D		5.5+5.5+4	42.6	126.84	209.78	253.42		1 1/16"	1 1/16"	1 1/16"	20	20	20	
PRD222-121555D	PRD222-121555S	14+14+14	49	147.4	245.7	300		1 1/16"	1 1/16"	1 1/16"	20	20	20	9.6